PARTS LIST		
ITEM	QTY	DESCRIPTION
1	1	NukaTap Body
2	1	NukaTap Shuttle
3	2	Ball Seal
4	1	Lever
5	1	Bonnet Cushion
6	1	Bonnet
7	1	Nozzle Washer
8	1	10mm Standard Nozzle
9	1	Handle Collar
10	1	Detent Actuator Shaft
11	1	Shank Seal / Restrictor
12	1	Flow Slider
13	1	Flow Bonnet
14	1	Flow Control Handle
15	2	Shaft Seals
16	1	Shaft Cushion
17	1	Flow Bonnet Damper

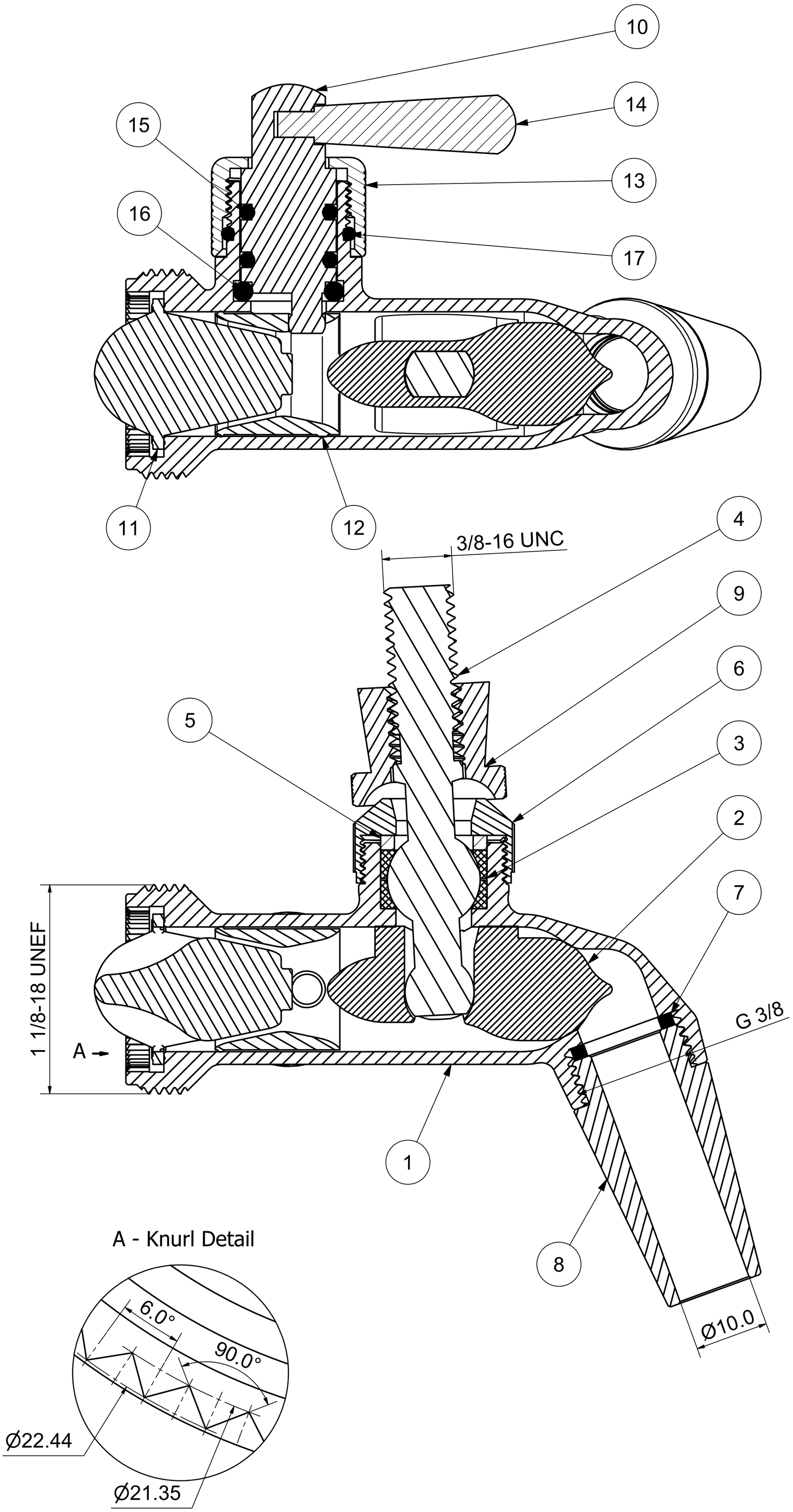

PROJECTION:	UNLESS OTHERWISE STATED ALL DIMENSIONS IN MILLIMETRES	MATERIAL:	FINISH:
	UNSPECIFIED TOLERANCES LINEAR: 0 = ± 1.0, 0.0 = ± 0.2, 0.00 = ± 0.05, 0.000 = ± 0.01 ANGULAR: 0 = ± 2.0°, 0.0 = ± 0.5°	PART NUMBER: KLTAPFC_A001	
	MACHINED SURFACE 3.2		